Hart&Cooley
install confidence

COMMERCIAL SERIES FLEX

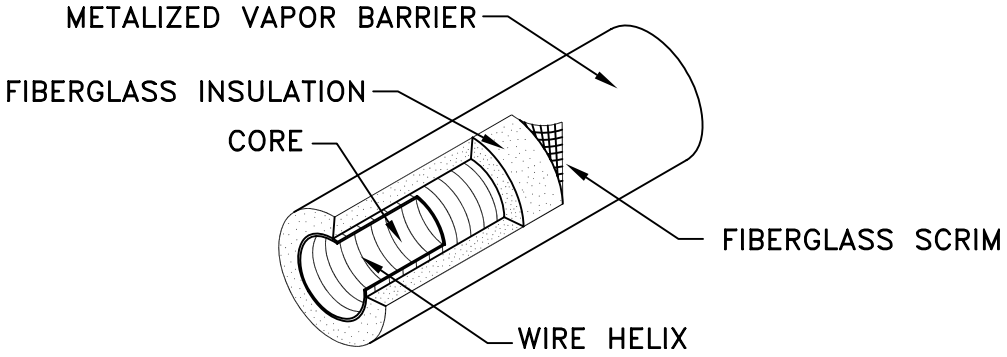

CORE

- Two tough plies consisting of a layer of metalized polyester and a layer of clear polyester encapsulating a steel wire helix creating a high strength and durable product.
- Rated pressures per UL–181: 4000 Pa. positive, 250 Pa. negative (<=305 mmø) & 125 Pa. negative (>305 mmø).
- Recommended maximum operating pressures (ADC Test FD 72–R1):
  1500 Pa. positive for 305 mm diameter and under.
  1000 Pa. positive for 355 mm diameter and over.
- Rated maximum air velocity: 30.5 m/s.

THERMAL CHARACTERISTICS

- R–0.74 $m^2 \cdot °C/W$ certified by Underwriters Laboratories Inc. and the Air Diffusion Council in accordance with ADC Flexible Duct Performance and Installation Standards using ASTM C–518 at installed wall thickness on flat insulation only.

VAPOR BARRIER

- This metalized vapor barrier is constructed using fiberglass scrim which provides an outstanding combination of strength and tear resistance.
- Perm rating of 2.3 ng/(s m^2 Pa.) when measured per ASTM E96, Method A.

SURFACE BURNING CHARACTERISTICS

- Flame Spread: Less than 25
- Smoke Developed: Less than 50

OPERATING TEMPERATURE RANGE

- –7°C to 60°C Continuous
- –7°C to 121°C Intermittent

SIZE AVAILABILITY

- Standard length: 7.6 m
- Diameters offered: 102, 127, 152, 178, 203, 229, 254, 305, 356, 406, 457 & 508 mm
- Plain ends

APPROVALS

- UL–181 (UL LISTED)
- NFPA 90A & 90B
- HUD
- California Bureau of Home Furnishings
- Most Federal, State, and Local Codes and Standards.

GREENGUARD Children & Schools Indoor Air Quality Certified

JOB NAME:	SUBMITTED BY:	DATE: 11/9/09	SD–5021m
LOCATION:		**F294, FB294** Insulated Flexible Air Duct, Class 1 R–0.74 $m^2 \cdot °C/W$, Two Ply Metalized Polyester/Polyester Core Metalized Vapor Barrier	
ARCHITECT:			
ENGINEER:			
CONTRACTOR:			

Hart & Cooley, Inc., Grand Rapids, MI 49512 Telephone 800–433–6341 Fax: 800–223–8461
© Hart & Cooley, Inc 2005